Electrolux PROFESSIONAL

Salamanders
Gas Salamander, open on 3 sides - 750mm

ITEM #

MODEL #

NAME #

SIS #

AIA #



283032 (E0UUAABOMPA) Gas Salamander, open on 3 sides, adjustable grid, 750 mm, accepts GN 1/1

Short Form Specification

Item No.

Constructed in AISI 430 stainless steel. Table top model can be hanged on the wall with wall brackets (optional). Open on 3 sides. Piezoelectric ignition. Stainless steel mesh radiant elements, heated by means of 2 burners with pilot flame and safety thermocouple. Cooking grid adjustable on 6 positions by means of a rack system. Stainless steel drip tray and chromium-plated grid fitted with heat resistant handles.

Main Features

- 2 burners of 3,7kW each featuring safety pilot and thermocouple.
- Piezo ignition.
- Cooking plate size: 575x400 mm accept GN 1/1.
- Open 3 sides for rapid cooling and ease of use.
- Removable stainless steel drip tray and chromium-plated grid.
- Height of the grid can be adjusted on 6 different levels through the rack system.
- Grid can slide on runners and is provided with a security lock to avoid accidental fall.

Construction

- Entirely constructed in 430 AISI stainless steel.
- Table top unit can be wall mounted with dedicated optional accessory.
- 4 rubber feet.

Optional Accessories

- Wall mounted brackets kit for salamanders open on 1 side — PNC 283036 ❑

APPROVAL:

Salamanders
Gas Salamander, open on 3 sides - 750mm

Front

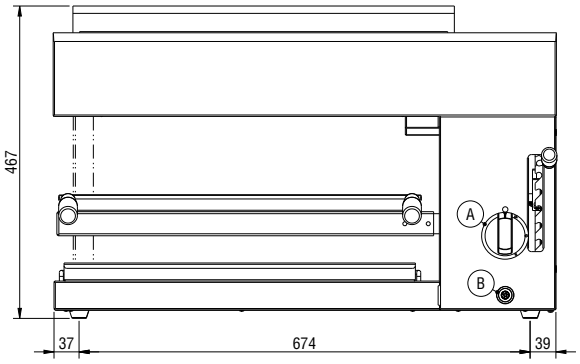

Side

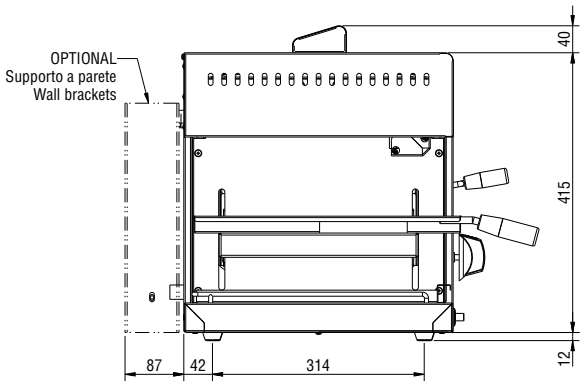

G = Gas connection

Top

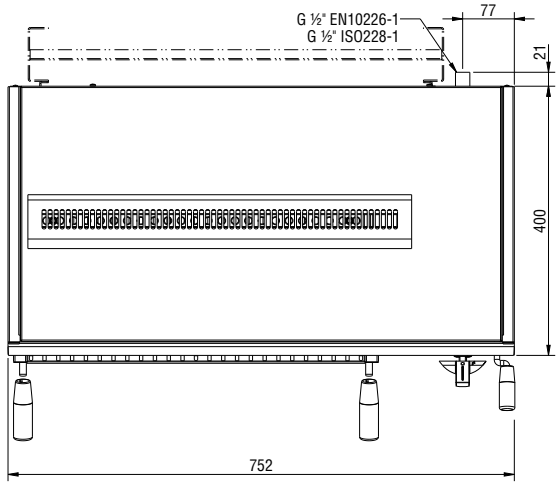

Gas

Gas Power:	7.4 kW
Standard gas delivery:	Natural Gas

Key Information:

External dimensions, Width:	752 mm
External dimensions, Depth:	500 mm
External dimensions, Height:	467 mm
Net weight:	41 kg
N° of grid levels:	6

The company reserves the right to make modifications to the products without prior notice. All information correct at time of printing.

2026.11.19